DRG. No.
L307150A

FRAME
SLA71 B5

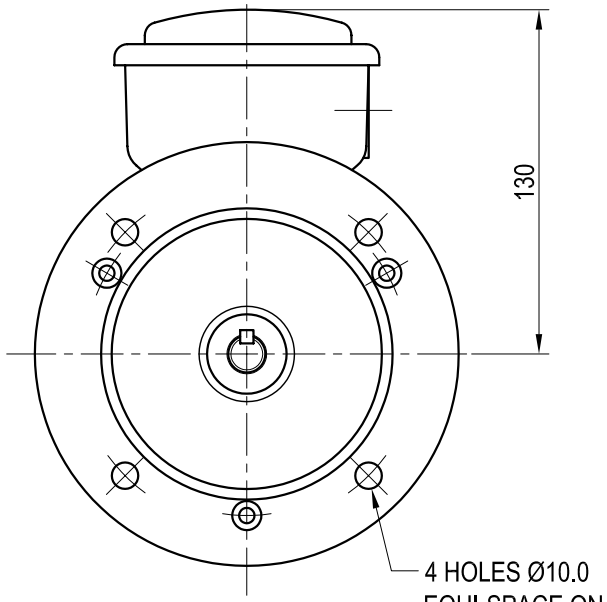

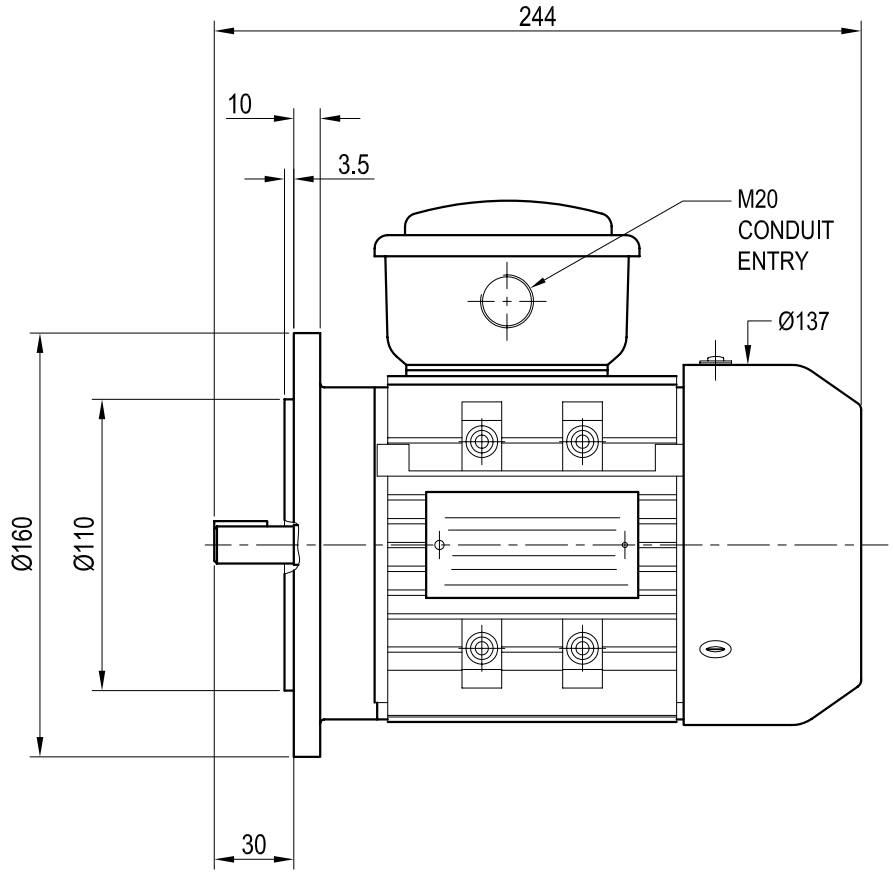

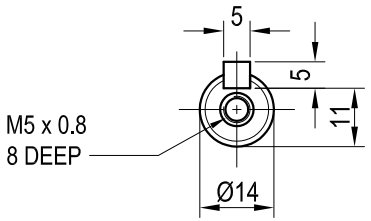

SHAFT DETAIL

All CMG products are regularly redesigned and improved and CMG reserves the right to change the design, technical specification and dimensions without prior notice.

NOTE:
TERMINAL BOX CAN BE ROTATED 90° INTERVALS

ISS.	ALTERATION	DATE	DRN.	APP.	NP/CR
A	ORIGINAL ISSUE	27/10/03	GW	CMG	

CMG TECHNOLOGY P/L
19 CORPORATE AVE
ROWVILLE VIC 3178
Ph: (03) 9237 4000
Fax:(03) 9237 4029
www.cmggroup.com.au

DRAFTING STANDARD AS 1100 | SIZE A3

UNLESS OTHERWISE STATED
ALL DIMENSIONS IN MILLIMETRES.
TOL. - LINEAR: ±0.3
- ANGULAR: ±1 °

TITLE: MOTOR OUTLINE 71 SLA B5

CUST.	MATL.	WT.
CMG	-	-

SCALE	DATE.	DRN.	CKD.	CKD. DATE
1 : 2	27/10/03	G. WELIN	CMG	4/2/04

GRP. - PART No. -
FAM No. -
DRG. No. L307150A